DATE January 21, 2009	OUTLINE DIMENSIONS	MOTOR TYPE: AEUH8B-DC
CAT. #:	3-PHASE INDUCTION MOTOR	FRAME NO. 324TSC

Pole	HP	kW	Hz	VOLT	Syn.Speed r/min(rpm)
2					

Ins	Rating	Dimension in	Approx Weight	Bearings
F	CONT.	inches	640 LBS	DE: 6312ZC3 NDE: 6212ZC3

Totally Enclosed Fan-cooled Vertical Type.Squirrel-cage Rotor.

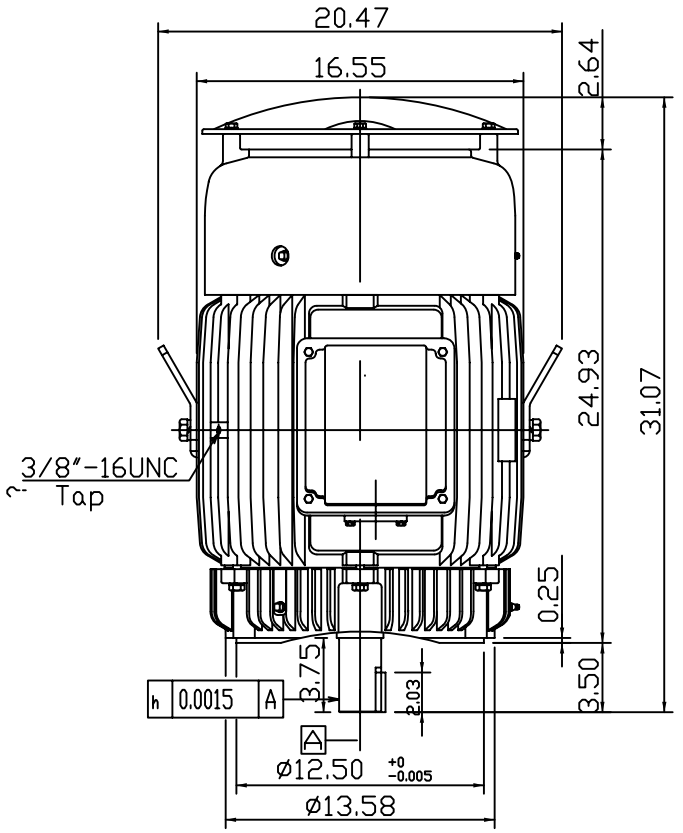

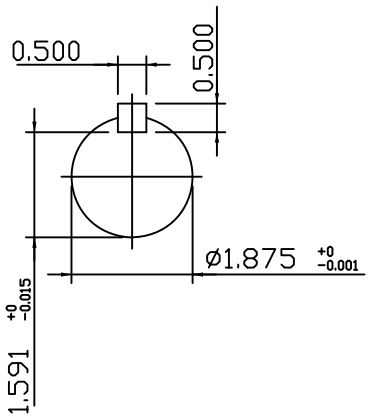

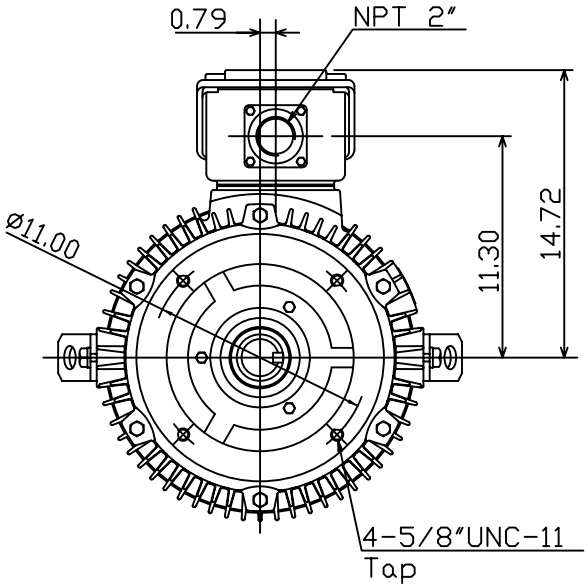

Note:
1. C/W Inpro/Seal In Both End Brackets.
2. Motor Vibration:10?

0			

DWN.	???????	01 01 09	TECO Westinghouse	DWG NO.
CHKD.	???????	01 02 09		31057H416260
APPD.	????????	01 02 09		